4206R-J4.25

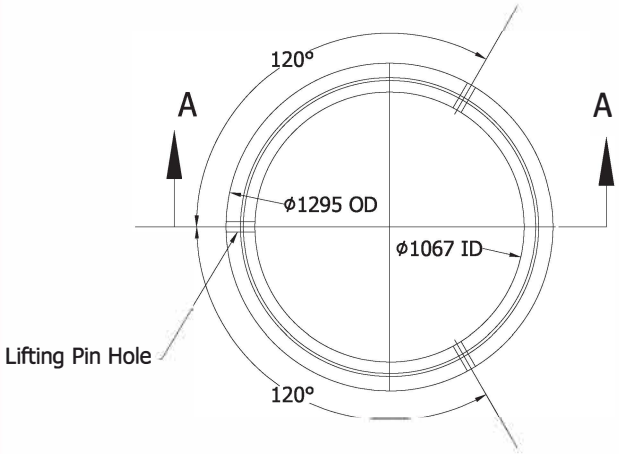

PLAN VIEW
SCALE 1:30

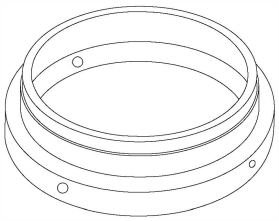

3D VIEW

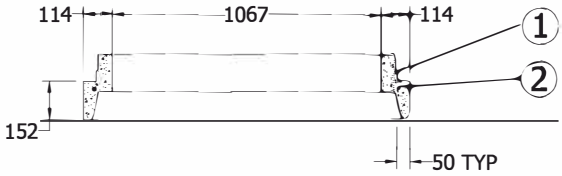

SECTION A-A
SCALE 1:30

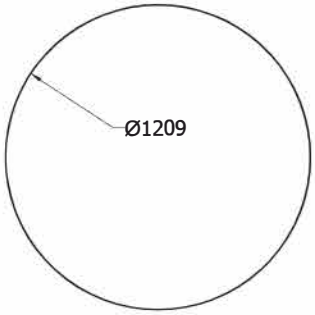

6mm Hoop Steel
SCALE 1:30

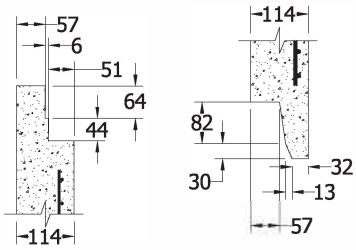

TONGUE & GROOVE DETAIL
SCALE 1 : 15

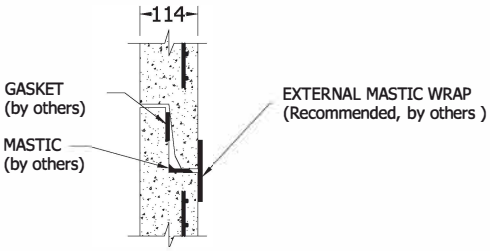

SUGGESTED JOINT DETAIL
SCALE 1 : 15

Specification and General Notes:

1. Manhole design/manufacture to ASTM C478M Specification.
2. Concrete testing to current version of ASTM C497/CSA 23.1&2.
3. Min. concrete compressive strength 30 MPa with Max. W/C ratio of 0.5
4. Gasket to ASTM C-443 specification (by others).
5. Concrete cover to be Min.25mm.
6. All dimensions to be millimeter.
7. Welded wire mesh overlap to be 300mm.
8. Manhole design and construction to MMCD manhole specification section 02725.
9. Manufacturing tolerance to be +/- 5mm.
10. Concrete Exposesure Class to be A-3
11. Min. Stripping Strength to be 15MPa
12. All Form Finish to be Standard Grade
13. All Unformed Finish to be Steel Trowelled Finish or Wood Float Finish
14. Lifting cable and accessaries to meet the strength requirement in lifting detail
15. Hoisting and Rigging system to meet WORK SAFE BC OHS Regulation Guideline Part 14/15

DIAMOND PRECAST CONCRETE	**Description:** 1067ID x 152H Manhole Riser T&G	Drawn : D.L.	Date : 18/10/2016	**Catalog No.** 4206R -J4.25
	42"ID x 6"H Manhole Riser T&G 310 #	Aproved : V.W.	Load Rating: N/A	**Dwg. No.** 42-01
	Project: / Estimated Weight 310 lbs	Rev. No. A	Scale : As Shown	

7520 Conrad Street **Burnaby, B.C. V5A 2H7** **Phone : 604-415-5181** **Fax : 604-415-5185**
www.diamondprecast.com

This drawing is the property of the Diamond Precast Concrete. All information contained herein is confidential and may not be used in whole or in part without written permission from the owner

Sheet No. 1 OF 1