DIAMOND
PRECAST CONCRETE & MUNICIPAL CASTINGS

A23.4 - 09
ASTM C478

SUPPORTING MEMBER MMCD
PLATINUM
2009 EDITION

City of Vancouver - Point Grey RD

Project Description: Manhole Base D3 & S3

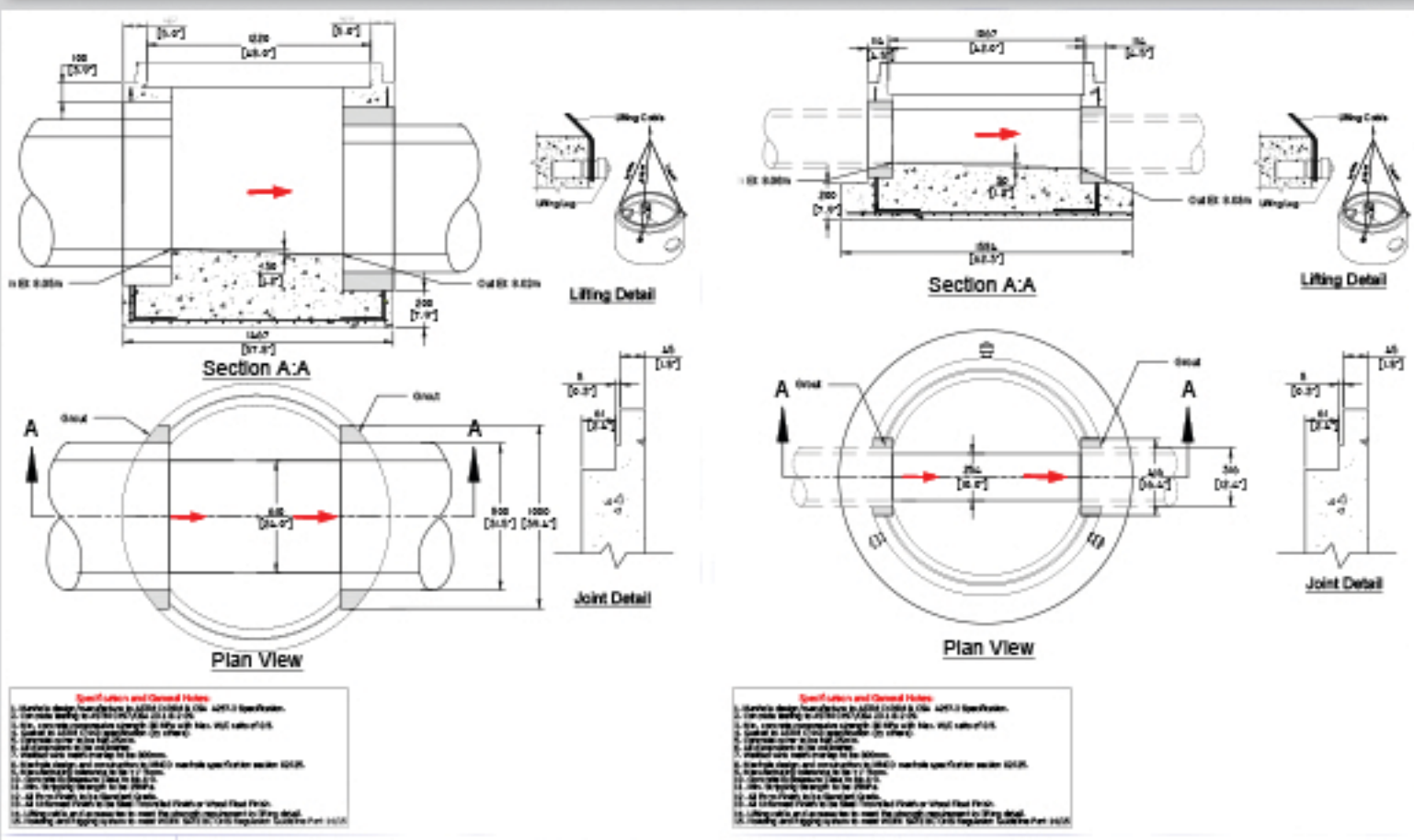

Click to Enlarge

Precast Pouring Support

Pouring

Installation

COMPLETE CAPABILITIES

PREDL systems
THE MANHOLE LINER EXPERTS

WEBSITE

diamondprecast.com

COMPLETE CAPABILITIES

DIAMOND PRECAST CONCRETE & MUNICIPAL CASTINGS + CSA = MMCD PLATINUM

OPT-IN

Weekly Newsletters

info@diamondprecast.com 604.415.5181