DIAMOND
PRECAST CONCRETE & MUNICIPAL CASTINGS

A23.4 - 09
ASTM C478

SUPPORTING MEMBER MMCD PLATINUM
2009 EDITION

MANHOLE BASE w/ A-LOK & Z-LOK GASKET

Engineer: Engineering Services [Vancouver, BC] *Project:* Point Grey Rd [Vancouver, BC]
Owner: City of Vancouver [Vancouver, BC]

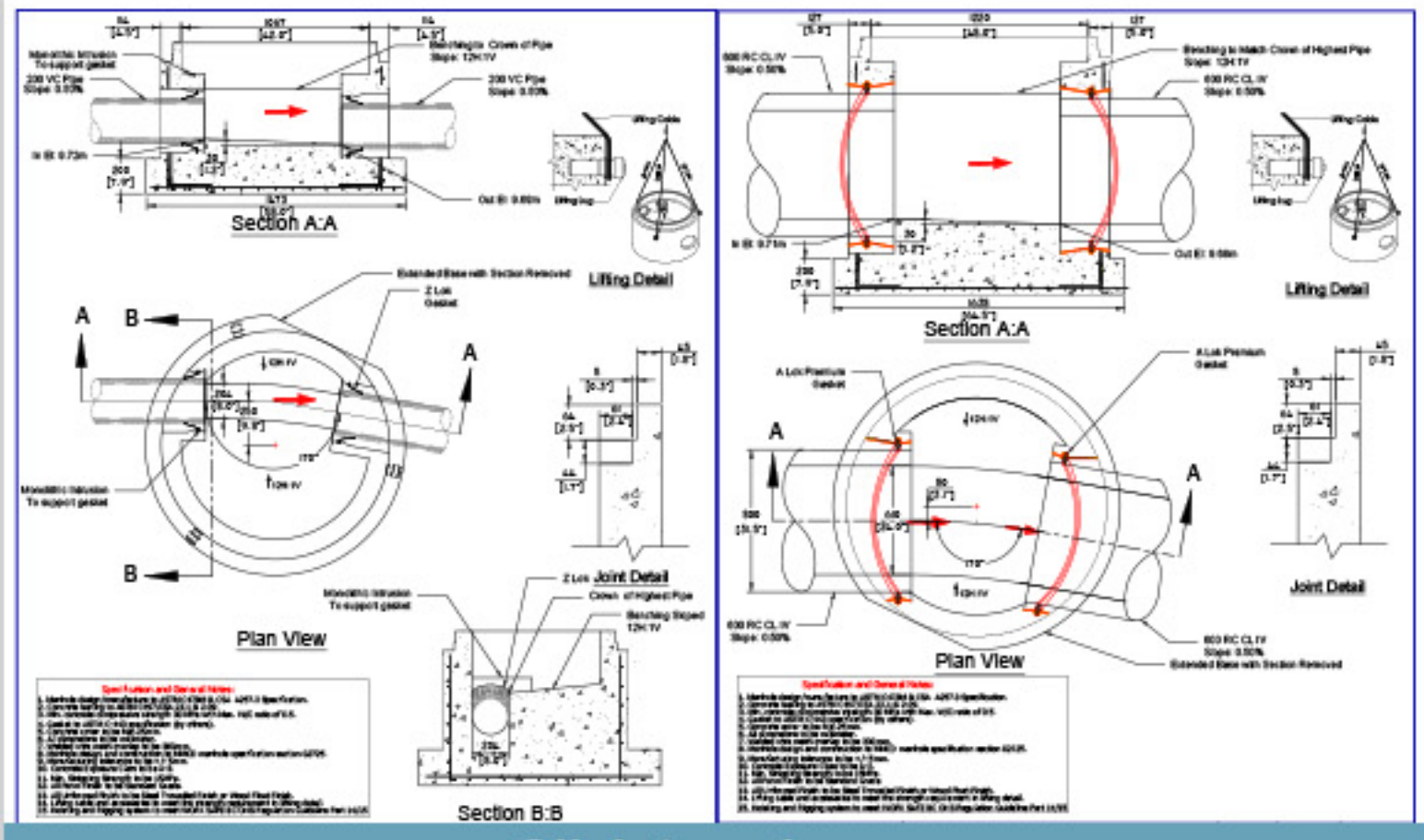

Click to enlarge

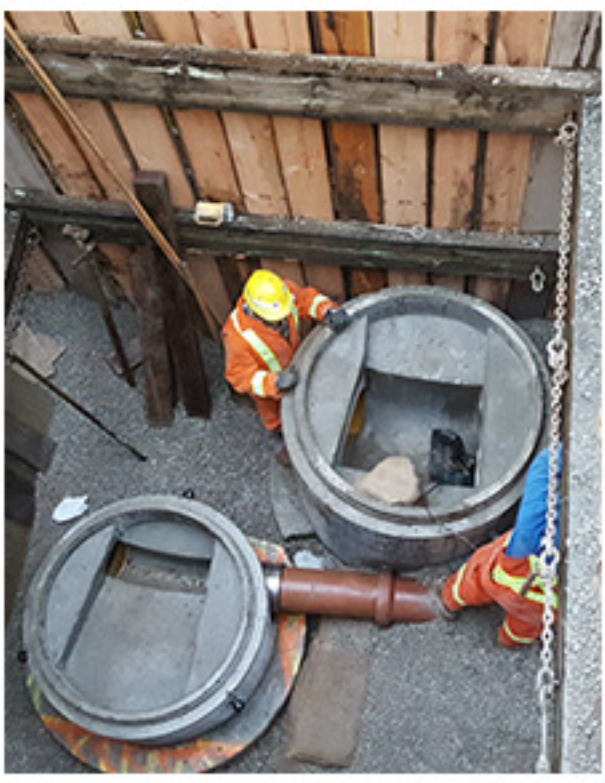

COMPLETE CAPABILITIES

PREDL systems
THE MANHOLE LINER EXPERTS

WEBSITE

diamondprecast.com

COMPLETE CAPABILITIES

DIAMOND PRECAST CONCRETE & MUNICIPAL CASTINGS + CSA = MMCD PLATINUM

OPT-IN

Weekly Newsletters

info@diamondprecast.com 604.415.5181